BROAN®

SPECIFICATION SHEET

F40000 SERIES TWO-SPEED 4-WAY CONVERTIBLE RANGE HOOD

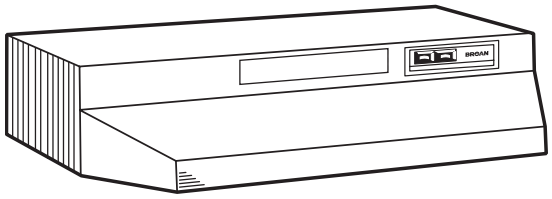

Constructed with quality and good looks, the F40000 is superior to the competition whether ducted vertically, horizontally, or non-ducted.

FEATURES

- Max. Blower CFM*: 230
- Two speed fan control
- Polymeric blade and light lens (accepts up to 75 W bulb)
- Washable aluminum filter
- Converts to non-ducted by removing cover plate from front of hood and installing the non-ducted filter (purchase separately)
- Mitered sides and hemmed bottom for safety and good looks
- 3¼" x 10" damper/duct connector included
- 7" round duct adapter plate included. 7" round damper purchase separately.
- Available in 24", 30", 36" and 42" widths
- Contemporary styling in White, Almond, Biscuit, Black, Stainless Steel (all widths), and Black Stainless Steel (30" width only)

SPECIFICATIONS

VOLTS	AMPS	RPM	CFM	SONES	DUCT
120	2.5	2850	160	6.5	3¼” x 10” (H)
120	2.0	2850	160	6.5	3¼” x 10” (V)
120	2.0	2850	190	6.5	7” Round (V)
120	2.0	2850	–	–	Non-ducted

HVI-2100 CERTIFIED RATINGS comply with new testing technologies and procedures prescribed by the Home Ventilating Institute, for off-the-shelf products, as they are available to consumers. Product performance is rated at 0.1 in. static pressure, based on tests conducted in a state-of-the-art test laboratory. Sones are a measure of humanly-perceived loudness, based on laboratory measurements.

* Max. blower CFM indicates the performance of the hood blower in open air.

TYPICAL SPECIFICATION

Range hood shall be Broan Model F40000.

Unit shall be convertible between ducted using a washable aluminum filter (included) and non-ducted (purchase non-ducted filter separately).

Motor to be permanently lubricated. RPM not to exceed 2850.

Unit shall have a two-speed fan switch with separate light switch.

Sides shall be mitered and bottom edge hemmed - with no sharp edges.

Air delivery shall be no less than 160 CFM and sound levels no greater than 6.5 Sones (3¼" x 10" horizontal and vertical discharge) or 190 CFM at 6.5 Sones (7" round discharge). All air and sound ratings shall be certified by HVI.

Unit shall be U.L. listed.

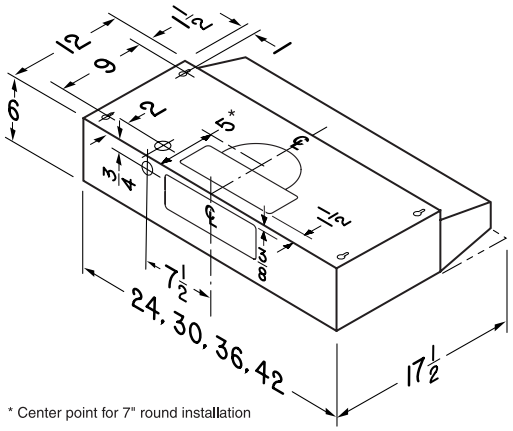

* Center point for 7" round installation

Can be used to comply with LEED requirements.

Broan-NuTone LLC, 926 West State Street, Hartford, WI 53027 (1-800-637-1453)

REFERENCE	QTY.	REMARKS	Project
			Location
			Architect
			Engineer
			Contractor
			Submitted by Date