BROAN

SPECIFICATION SHEET

40000 SERIES TWO-SPEED DUCTED RANGE HOOD

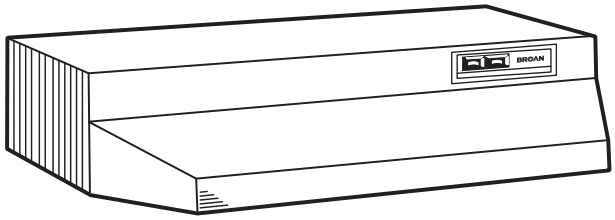

Constructed with quality and good looks, the 40000 out-performs the competition whether ducted vertically or horizontally.

FEATURES

- Rocker-type fan and light switches
- Polymeric blade and light lens (accepts up to 75 W bulb)
- Washable aluminum filter
- Mitered sides and hemmed bottom for safety and good looks
- Contemporary styling in White, Biscuit, Almond, Black and Stainless Steel
- Available in 30" and 36" widths
- 21"and 42" available in White, Biscuit and Almond
- 24" available in White, Biscuit, Almond and Stainless Steel

SPECIFICATIONS

Volts	Amps	RPM	Sones		HVI CFM	Max Blower Airflow	Duct
			Ver.	Hor.			
120	2.0	2795	6.5	6.5	160	210*	3¼" x 10"

HVI-2100 CERTIFIED RATINGS comply with new testing technologies and procedures prescribed by the Home Ventilating Institute, for off-the-shelf products, as they are available to consumers. Product performance is rated at 0.1 in. static pressure, based on tests conducted in a state-of-the-art test laboratory. Sones are a measure of humanly-perceived loudness, based on laboratory measurements.

* Where noted performance rating is not HVI certified but was established in accordance with HVI Standardized test procedure.

Tested to show compliance with HUD/FHA Minimum Property Standards for Mechanical Ventilation.

TYPICAL SPECIFICATION

Range hood shall be Broan Model 40000.

Unit shall have backdraft damper and be ducted vertically (horizontally) to the outside.

Motor to be permanently lubricated. RPM not to exceed 2795.

Unit shall have a two-speed fan switch and separate light switch.

Sides shall be mitered and bottom edge hemmed - with no sharp edges.

Air delivery shall be no less than 160 CFM and sound levels no greater than 6.5 sones (vertical) and 6.5 sones (horizontal discharge). All air and sound ratings shall be certified by HVI. Unit shall be U.L. listed.

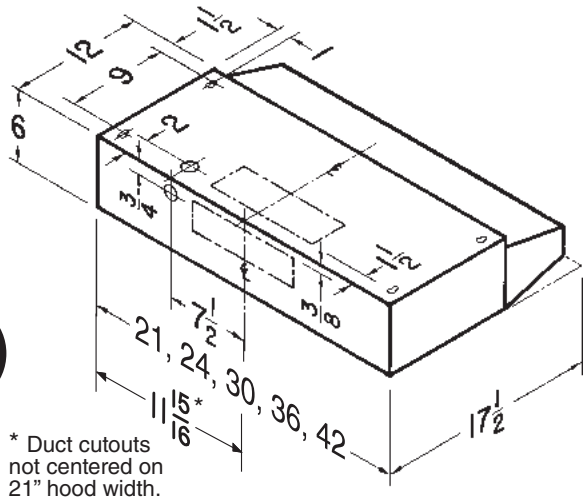

* Duct cutouts not centered on 21" hood width.

Broan-NuTone LLC, 926 West State Street, Hartford, WI 53027 (1-800-558-1711)

REFERENCE	QTY.	REMARKS	Project
			Location
			Architect
			Engineer
			Contractor
			Submitted by Date