DK94

Door Knocker with 180° Door Viewer

- 9/16″ Bore
- Size: 2-3/8″ x 5 -1/4″
- Individually poly-bagged
- Packed with screws
- Conforms to ANSI/BHMA A156.16 L23151
- For Doors 1-3/8″ to 1 -3/4″ Thick
- Die cast material
- Architectural finishes available

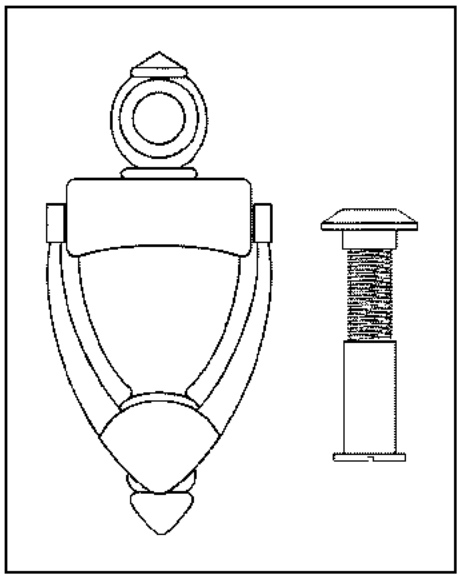

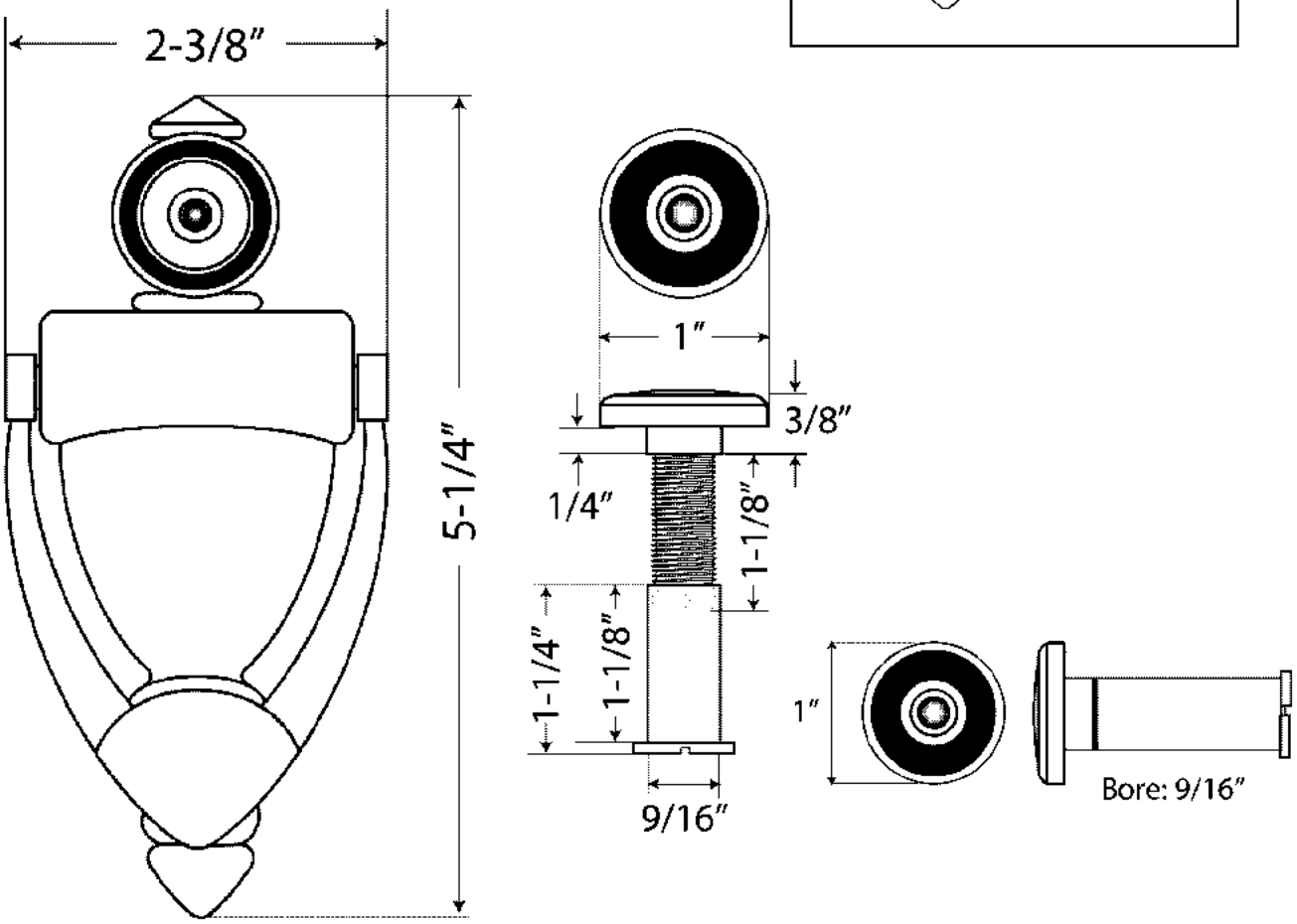

Cal-Royal Products, Inc.
6605 Flotilla St., City of Commerce, CA 90040 U.S.A.
Phone: (323) 888-6601 • (800) 876-9258 • Fax: (323) 888-6699 • (800) 222-3316
Email: sales@cal-royal.com • Website:www.cal-royal.com

VERSION DATE AUG-01 2009 CAL-ROYAL PRODUCTS INC.

The illustration and technical description in this Specification Sheet is current as of the date in the version box above. Cal-Royal Product reserves the right to, and may frequently make changes and/or improvements in designs and dimensions.